Resistance thermometer, straight type with fixed measuring cable

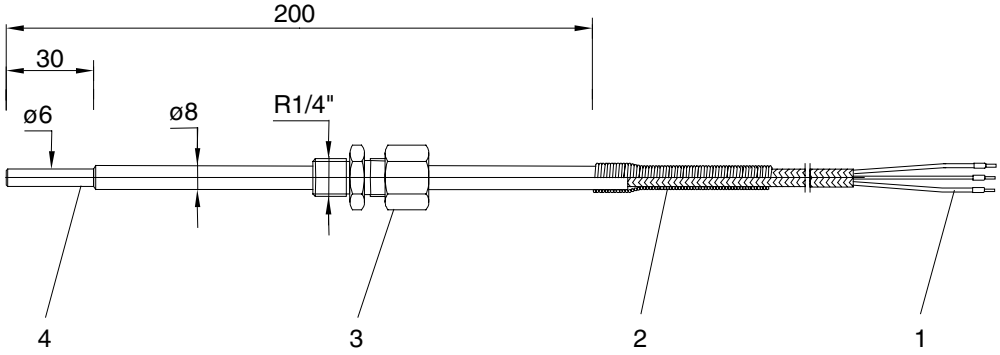

1. Cable terminal
2. Protective spring
3. Screw joint
4. Protective tube

Resistance thermometer, 3-wire-type with slidable screw joint and 3 m fixed PTFE measuring cable with alloy steel schielding and protective spring, wires with cable terminals.

Technical Data:

Measuring jaw:	1 x Pt100 DIN, poured in, vibration safe
Transmit times (air 1 m/s	t_{05} = 50 s $_{09}$ = 150 s
Protective tube:	VA, 200 x 8 mm / measuring tip 30 x 6 mm
Cable:	3 m PTFE measuring cable for max. 280°C
Protective spring:	VA, 40 mm
Screw joint:	R 1/4"

Order text:

Resistance thermometer 1 x PT100 DIN
with 3m fixed PTFE measuring cable,
three-wire-type,
VA-protective tube 200 x 8 mm / 30 x 6 mm,
slidable screw joint R 1/4"
List-No.: 714 400p3