Pneumatic control valve for diverting function 332 4/5 20Sf/g/h E
with PTFE-V-ring sealing, DN200
EN-GJS-400-18-LT (GGG-40.3), PN 16/25, with 12-18kN actuator

Body: EN-GJS-400-18-LT (GGG-40.3), three way form
Version with diverting plug, for water and steam
Pressure range: PN 16, PN 25
Immersion length acc. to DIN EN 558, basic series 1
Flanges acc. to DIN EN 1092-2 type 21
Spindle sealing: spring loaded PTFE-V-ring unit
for media temperatures up to 250°C
Alternatively: graphite packing
for media temperatures up to 350°C
Internal parts: stainless steel, replaceable seat rings
Flow characteristic: linear
Positioning ratio: 30:1
Leakage: < 0,01% Kvs

Actuator: diaphragm area: 800 cm², ∅ = 420 mm
type ...h: 1730 cm², ∅ = 600 mm
Control signal / closing pressure: see table
Operating mode: "Spring closes straightway AB-A
Air connection: G 1/4", type ...h: G 3/4“
Operating pressure: 6,0 bar, type ...h: 3 bar

Accessories, special types**:**
I/P-Positioner, control signal 4...20 mA (see page 390 8)
P/P-Positioner, control signal 0,2...1,0 bar (see page 390 5)
Electro-pneum. transformer (see page 390 3)
Solenoid valve for operating air (see page 393)
Limit switches (see page 39e)
Inductive limit switches (on request)
Manual operating device (on request)
Other kvs- values (on request)
Flange drillings acc. to ANSI / JIS (on request)

Order text:
Pneumatic control valve in three way form, with diverting plug
EN-GJS-400-18-LT (GGG-40.3), PN . ., DN200, Kvs 470
Spindle sealing with PTFE-V-ring unit
Spring closes straightway AB-A
Control signal . . . – . . . bar, closing pressure . . . bar
List-No. 332 . 20 S . , accessories: . . .

Pressure-Temperature ratings acc. to DIN EN 1092-2:

by:	-10…120	150	200	250	300	350	°C*
PN 16	16	15,5	14,7	13,9	12,8	11,2	bar
PN 25	25	24,3	23	21,8	20	17,5	bar

* = max. 250°C for spindle sealing with PTFE-V-ring unit

DN	**List-No.**		**Kvs**	**Stroke**	**Closing pressure**** (bar) for control signal...		
	PN 16	PN 25	m³/h	mm	1,5...4,5 bar	2,1...4,1 bar	0,9...2,0 bar
200	332420S**f**	332520S**f**	470	50	4,0		
200	332420S**g**	332520S**g**	470	50		4,9	
200	332420S**h**	332520S**h**	470	50			6,5

*** higher closing pressures on request*

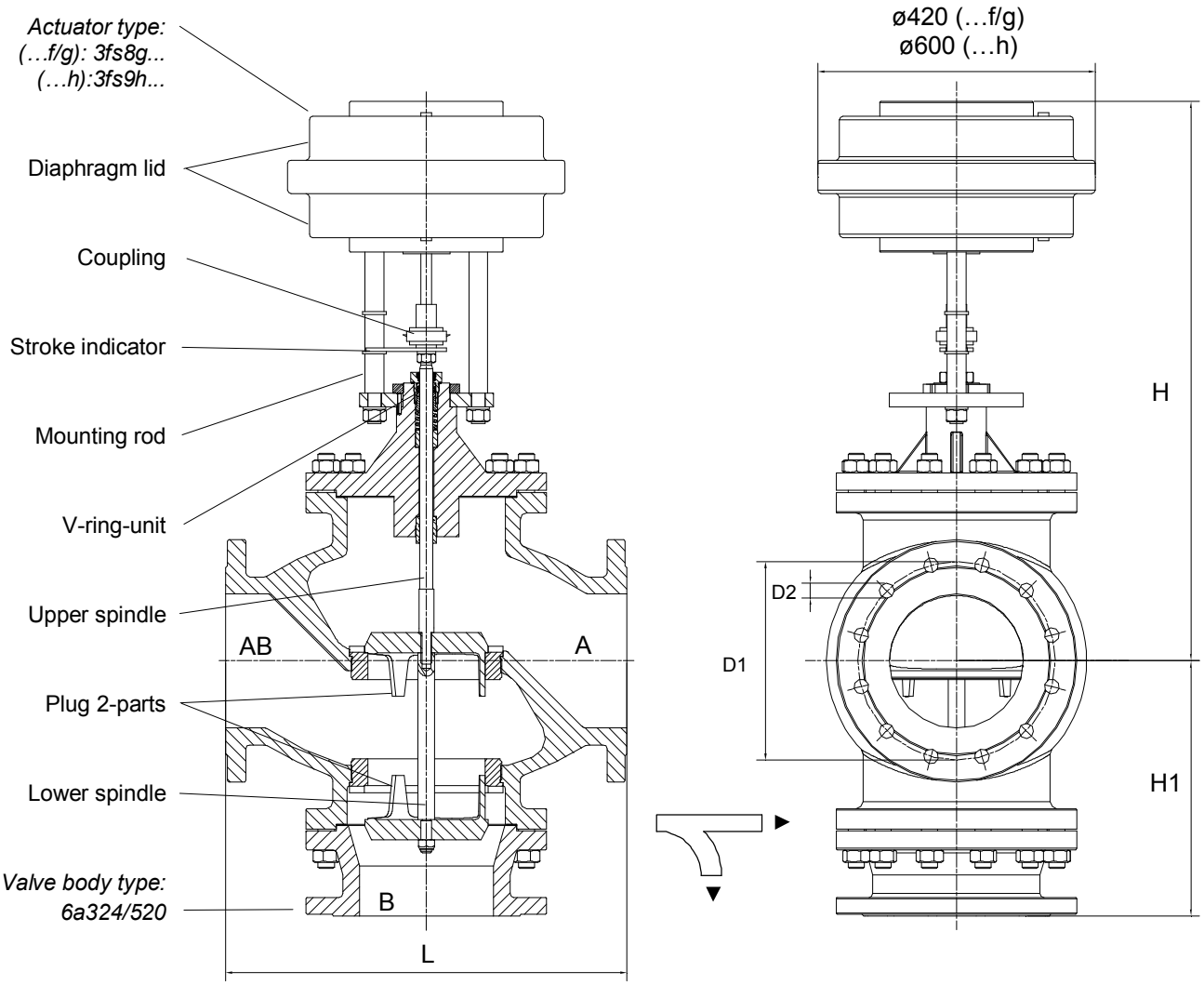

Dimensions

DN	200
Height H (…f/g)	835
Height H (…h)	1200
Stud length H1	380
Length L	600
Weight kg (…f/g)	315
Weight kg (…h)	400

Flange connections acc. to DIN EN 1092-2

PN	D1	D2	Quantity of screws	Thread
16	295	22	12	M20
25	310	26	12	M24