1. Terminals supply voltage
2. Coding switches address adjustment
3. Status-LED
4. RJ-45 connector KFM device
5. 9-pole D-SUB plug PROFIBUS
4. Configuration interface (service) for PC connection

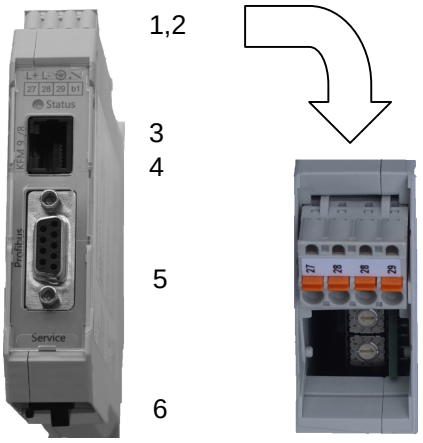

General description:
The connection of KFM devices to the PROFIBUS DP is realised by the external bus adapter 99spde, which is configured to the requested transmission data e.g. actual value, setpoint. The PROFIBUS interface is able to replace separate wiring of analogue (external setpoints, signal outputs) or digital signals (via binary inputs and status bits respectively via relay outputs and control bits). The PROFIBUS-DP interface is carried out as RS 485 bus interface referring to EN50170. The PROFIBUS adapter has to be connected via a 9-pole D-SUB plug directly to the bus wiring. The communication between the adapter and the service interface of the KFM device takes place by a patch cable(1,5m), which is delivered with each adapter. For each segment 32 devices could be installed, with a repeater up to 99. For the data transmission data modules for fixed and floating point operation are available. The baudrate is detected automatically up to 12 Mbaud. Further Information refer to the GSD file in the appendix.
An error bit makes it possible to monitor the function of the adapter. Additionally, connection errors are registered and available for diagnosis by the use of fault memory.

Types:

99spde04.	Adapter for 4 PROFIBUS values, power supply 24V DC
99spde12.	Adapter for 12 PROFIBUS values, power supply 24V DC
99spde28.	Adapter for 28 PROFIBUS values, power supply 24V DC

Device variants (last number):

.0	Functional module without power supply for connection to power supply modules
.0i	Functional module for connection to power supply of already existing KFM-assemblies
..0b	Functional module with binary input 24V DC; terminal open: normal function / read and write possible, terminal closed: read only

Power supply module:

99e500	Power supply module 100-250 V AC

Adjustments:
The PROFIBUS adapter is delivered preadjusted. In case of changes, the preadjustments except from the bus address, can easily be modified by a configuration program (WinPKS PC Software from version 1.9L).

		factory setting
Data word 1	Bus setpoint 1 (1060 ref. to protocoll KFM 2.0)	Bus setpoint 1
Data word 2	Actual value 1 (1010 " " ")	Actual value 1
Data word 3	Actual value 2* (1011 " " ")	
Data word 4	Control signal* (1020 " " ")	
	for further parameter codes refer to page 5 and 6	
	** = depending on type*	
Bus address	0..99, Coding switch, available after removing the covering below the power supply terminals *Hint: In case of multiple bus participants different addresses have to be adjusted !*	5

connection diagram:

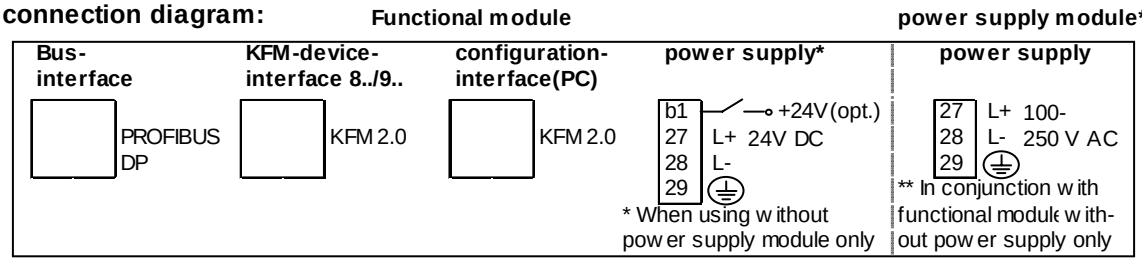

Installation note:

The modules must be locked on the designated mounting rail one after the other and then **pushed together**. The plug connectors connect the individual modules. Before removal, the modules must be **shifted apart** one after the other.

Commissioning:

Set the desired double-digit profibus-address by use of the two coding switches (available after removing the covering below the power supply terminals). Different addresses have to be configured on multiple adapters. Connect Profibus with 9-pole D-SUB connector and patch wire (1,5m) with service interface of the KFM device.The LED on the front signalises the operating status:

yellow permanent:	Normal operation
yellow flashing:	Communication error between KFM device and PROFIBUS-DP adapter Hint: all transmitted values are set to “0“, bit 8 of the respective status byte (communication error) ist set to “0“. The respective fault memory will be increased by 1.
red flashing:	Communication error PROFIBUS DP, PROFIBUS DP not active Hint: all transmitted values are set to “0“, the respective fault memory will be increased by 1.
red yellow flashing:	Communication error PROFIBUS DP and KFM device Hint: all transmitted values are set to “0“, each fault memory will be increased by 1.

Installation dimensions:

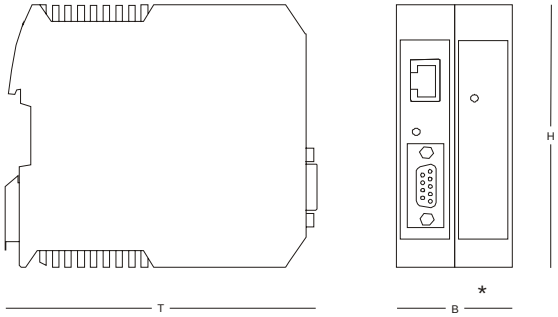

H= 99mm,
* version with or witout power supply module:
B = 22,5mm or 45mm, T = 116mm

Technical data:

Housing: for fastening to 35mm mounting rail
Installation orientation: optional
Type of protection: IP20 according to EN 60529
Perm. ambient temperature: 0..60°C
Nominal temperature: 20°C
Power supply: 24V DC, about 100 mA,
alternative 100-250V AC, about 12 VA

Wiring example:

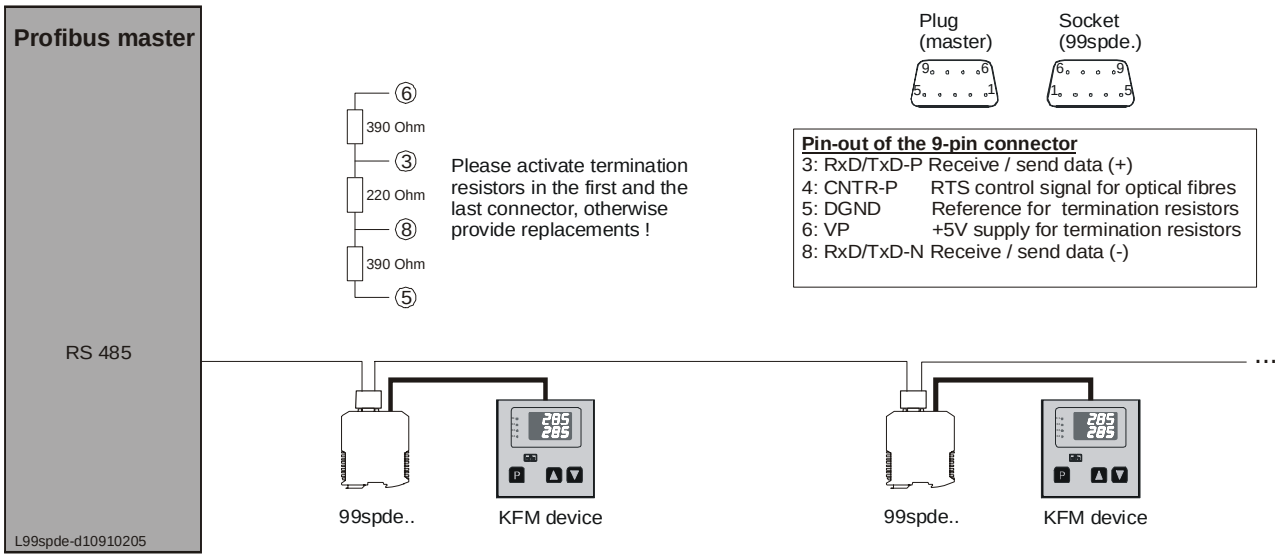

Data transmission:
The data to be transmitted are compiled in modules, data transmission is cyclical.
One module each is provided for fixed decimal and floating decimal data transmission. The modules are selected via a configuration tool in the master assembly.

The different modules differ in the number of transmission values according to the following table. Control word 2, status word 2, status word 3 or transmit resp. receive values are configurable via WinPKS-PC-software for data transmission.

module	transmission mode	number of transmission values*
Format O	fixed decimal (fix point)	4
Format P	floating decimal (floating point)	4
Format K	fixed decimal (fix point)	12
Format L	floating decimal (floating point)	12
Format M	fixed decimal (fix point)	28
Format N	floating decimal (floating point)	28

The data frame always contains control- and status word 1. Furthermore, the structures for control word 2, status word 2 and 3 as well as the resp. number of transmission values are available in the data frames K to P for each KFM-device. Depending on configuration, the resp. values are transmitted in these structures.
In the older data frames A to H, the structures for control word 2, status word 2 and 3 are not available.

Data modules (fixed decimal / floating decimal):
Refer to the following table for construction of the data modules:
The transmit- and receive values of the fixed decimal data modules are displayed in the 16-bit fixed decimal - format with one decimal place (Fixpoint 1). Range of values: -999.9 to +3200.0

The transmit- and receive values of the *floating decimal data-modules* are displayed in the 32-bit floating decimal - format according to standard 754 IEEE.

The digital 8 bit modules (digital-SERin / SERout / module software, code 6210..19 resp. 6230..39) are transferred with values from 0..255.

	Read	**Value**
No	**Identification**	**Format fix.-/ float. dec.**
1	Status word 1 (1byte) #	0x10
2	Status word 2(5byte) # optional	0x14
3	Status word 3(5byte) # optional	0x14
4	Received value 1	0x50/ 0xD1
5	Received value 2	0x50/ 0xD1
6	Received value 3	0x50/ 0xD1
7	Received value 4	0x50/ 0xD1
..	Received value..*	0x50/ 0xD1

	Write	**Value**
No	**Identification**	**Format fix.-/ float. dec.**
1	Control word 1 (1byte) #	0x20
2	Control word 2(5byte)# optional	0x24
3	Transmitted value 1	0x60/ 0xE1
4	Transmitted value 2	0x60/ 0xE1
5	Transmitted value 3	0x60/ 0xE1
6	Transmitted value 4	0x60/ 0xE1
..	Transmitted value..*	0x60/ 0xE1

* = Number of receive-/ transmitt values depending on the selected data frame # = structure see page 4

Example: (complies to preadjusted parameters, format: floating point)
Data word 1 = bus-setpoint (1060) (write)
Data word 2 = actual value 1 (1010) (read)
Data word 3 = actual value 2 (1011) (read)

	Read	
No	**Value**	**Explanation**
1	0000 0000	Bit 1 = 0; Bit 2 = 0 measurements error-free
2	-	-
3	-	-
4	0x43 75 99 9A	actual value 1 = 245.6
5	0x43 46 19 9A	actual value 2 = 198.1
6	-	-
..	-	-

	Write	
No	**Value**	**Explanation**
1	0000 0001	Bit 1 = 1 bus-setpoint active
2	-	-
3	0x42 C8 00 00	bus-setpoint = 100.0
4	-	-
5	-	-
..	-	-

format of status and control words

read: (from KFM device)

status word 1 (8 ASCII-characters, generally existent)

char. 8	char. 7	char. 6	char. 5	char. 4	char. 3	char. 2	char. 1

ASCII- character 1..7: status measuring input 1 .. 7
0 = error-free measurement; 1 = fault at the resp. input
ASCII- character 8: status KFM-device-interface, 1 = normal operation, 0 = conn. error

status word 2 (0 - 40 ASCII-characters depending on existing binary inputs,
only available if code 1002 (*for devices 9..*) is configured)

char. 40	char. 39	..	..	..	..	char. 2	char. 1

ASCII-character 1..40: status binary input 1 .. 40
0 = binary input deactivated; 1 = binary input activated

alternative:

status word 2 (10 ASCII-characters, only available if code 1005 (*for devices 8..*) is configured)

character 10				..	..	..	..	character 1			
bit 40	bit 39	bit 38	bit 37	..	..	..	..	bit 4	bit 3	bit 2	bit 1

bit 1..40: status binary input 1 .. 40
0 = binary input deactivated; 1 = binary input activated

status word 3 (0 - 40 ASCII-characters depending on existing additional contacts,
only available if code 1005 is configured)

char. 40	char. 39	..	..	..	..	char. 2	char. 1

ASCII-character 1..40: status additional contact 1..40
0 = contact deactivated; 1 = contact activated

write: (to KFM device)

control word 1 (2 ASCII-characters, generally existent)

character 2				character 1			
bit 4	bit 3	bit 2	bit 1	bit 8	bit 7	bit 6	bit 5

bit 1 .. 4: control bus-setpoint 1 .. 4 (only series 902 / 93)
0 = bus-setpoint deactivated, internal sepoint (SP) active
1 = bus-setpoint active (SPB)

control word 2 (10 ASCII-characters, only available if code 1005 is configured)

character 10				..	..	..	..	character 1			
bit 40	bit 39	bit 38	bit 37	..	..	..	..	bit 4	bit 3	bit 2	bit 1

bit 1 .. 40: control additional contact 1 .. 40, if the contact is configured to “BUS“
0 = contact deactivated; 1 = contact activated

Diagnose:

Two resettable internal fault memorys are available for communication error analysis on the profibus- and KFM-service-interface. The number of communication faults is recorded by code 5281(communication fault to the profibus), 5282 (communication fault to the KFM-device). Both counter values are reset to zero by setting code 5280 (reset) to 1. Reading of the fault memorys and the reset function can only be achieved by the configuration-interface.

Configuration level: (Usable parameter depending on the type, consider potential mutual interference !)

display	purpose	value range	CODE (HEX)
ConF	type of controller		013C
Cod1	code number	0...9999	0142
Cod2	code 2..4	0...9999	0161..63
LNG	language selection	0=DEUTSCH, 1=ENGLISH, 2=USER DEF, 3=OFF	8800
Ist1..6	correction actual value 1..6	blo...bHi (+/-)	0124..29
Ain1..6	type of measuring input 1..6	0=4-20, 1=2-10, 2=0-20, 3=0-10, 5=rtd, 20=n100	011E..23
SP-F	switch-over of the ext. setpoint via menu / bin. input (SP/SPE)	-2=AUS, -1=SPEB(bin.), 0=SPEM(menu), 1=SP2	014F
YE	switch-over SPE / YE	0=SPE,1=YE	114E
SPE	function of the ext. setpoint	2=AbS,3=Add,4=Sub	112D
REL_	switch.behaviour of the first step,step contr.	0=stat, 1=rel	1144
(1) Y"	travel time of actuator channel 1	6...600	1(1)3A
(1) TE	switch-on delay per step, step controller	0...600	1(1)43
Cy"	cycle time	2...120	013D
(1) TP	pause time step controller	0...60	1(1)45
(1)out	type of output signal 0 / 4...20mA	0=0-20,1=4-20	1(1)3B
(1)out	output direction di / in	0=in(in),1=(in)di,2=diin,3=didi	1(1)3C
dSLo	valve drop. minimum	0...50	1122
out	limitation selection (min / max)	0=Lo, 1=Hi	1127
dSHi	valve drop. maximum	50...100	1123
(1) ib	integration range limit channel 1	0...100	1(1)40
(1)YLo	low limit control output	0...Yhi	1(1)38
(1)YHl	limitation control output	-100...100	1(1)41
(1)YHi	high limit control output	YLo...100	1(1)39
(1) TY	control output slope	0...100	1(1)42
(1) DB	damping range	0...100	1(1)25
(1) D"	damping value	0...100	1(1)26
Gr1..2	gradient 1..2	0...100	1132..33
rF1..2	waiting window value 1..2	0.1...999.9	1134..35
td	dead range	0.0...10.0	113D
Sout(1..3)	signal output 0/4...20mA	0=0-20,1=4-20	0136..38
Sou1..5	assignment signal output	11=Ist1, 12=Ist2, 21=SP	0155..5A
(1)Y_S	output reaction at meas.fault (relais)	0=off,1=K1,2=K2	1(1)3E
(1)Y_S	output reaction at meas.fault (Y)	YLo...YHi (continuous)	1(1)3F
(1)YAP	operating point	YLO...Yhi	1(1)37
YH	switch over control val. on / off	0=off,1=on	1148
YH	external control value	0...100	1149
d.SP	max. deviation actual value	0.1...200.0	0147
t"	tolerance period act.value (ser. interface)	1...100	014E
rEL1..8	function selection additional contact 1..8	0=LCA, 1=LCE, 2=SuA, 3=SuE, 4=SoA, 5=SoE, 6=StA, 7=USA, 8=USE, 11=OFF, 12=ON	2010..17
rEL1..8	input selection additional contact 1..8	1...6=Ist1...6, 11=1Y...	2018..1F
rEL1..8	channel / setpoint selection additional contact 1..8	1...4=1..4SP, 11=rSP...	2020..27
rEL1..8	condition relay 1...8 for measuring line fault	0=SiA,1=SiE	2028..2F
Adr	controller address	1...255	0141
BAUD	baud rate	0=9600, 1=19200, 2=38400	2629
anSERin	analog input value (via interface)	-10000..10000	6200..09
digSERin	8-bit digital input value (via interface)	00 .. FF hex e.g. 0..255	6210..19
anSERout	analog output value (via interface)	-10000..10000	6220..29
digSERout	8-bit digital output value (via interface)	00 .. FF hex e.g. 0..255	6230..39

Operating indication:

display	purpose	value range	CODE (HEX)
-	status- / control words 1..5		1001..05
-	status word type 821H75s.		100F
IST1	actual value 1..6		1010..15
Y(1)..5	controller output channel 1..5	-100...100	1020..24
Y	active controller output (e.g. 99g8.)	-100...100	102A
D.W.	difference actual value 1 – actual value 2		1052
M.W.	average actual value 1 / 2		1051
Setpoint level:			
(1)SP	(internal) set point value channel 1	Lo...Hi *(see level 2)*	1(1)00
(1)SP2	second set point value channel 1	Lo...Hi *(see level 2)*	1(1)01
(1..5SP) **(rSP)**	active set point value channel 1..5, also active ramp- / program set point value		1030..34
SP..	actual program step set point		3002
SPB	bus setpoint	Lo...Hi *(see level 2)*	1060..64
SP-F	switch over SP/SPE	0 = SP, 1 = SPE	111C
2SP	current sequential controller set point value		103F
P-CY	number of program cycles*	0...20	0148
Pro	actual program status	0=off,1=on,2=stop	3001
d15	density	500...1500	0152
Parameter level 1:			
FUE	guide controller on/off	0=off,1=on	014D
(1)P(1)..4	proportional band XP1..4 channel 1	0.0...999.9	1(1)03..06
(1)I(1)..4	integral action time Tn1..4 channel 1	0.0...999.9	1(1)07..0A
(1)d(1)..4	derivative time Tv1..4 channel 1	0.0..99.9/0.00..99.99	1(1)0B..0E
(1)Sh	neutral zone Xsh channel 1	0.05...1,0	1(1)0F
(1)SA1..2	switching interval 1..2 channel 1	0...range(bLo/Hi) *(see*	1(1)13..14
(1)Sd1..2	switching difference 1..2 channel 1	0...range(bLo/Hi) *level 2)*	1(1)15..16
SA1..8	switching interval addit.contact 1..8	0.0...range	2000..07
Sd1..8	switching diff. addit.contact 1..8	0.1...range	2008..0F
Parameter level 2(Usable parameters depending on the type, consider potential mutual interference !)			
Unit	display unit °C / °F	0=°C, 1=°F	013F
0bLo	min. val. range of actual val. 0 (diff/ aver.)	-999...bHi	1129
UNIT	viscosity	0=cst, 1=cP	0151
0bHi	max. val. range of actual val. 0 (diff/ aver.)	blo...4000	112A
1..6bLo	min. value range input 1..6	-999...bHi	010C..11
1..6bHi	max. value range input 1..6	blo...4000	0112..17
(1..3)SLo	min. value range signal output	-999...Shi	012A..2C
(1..3)SHi	max. value range signal output	SLo...4000	0130..32
0nst	decimal point actual value 0 (diff/ aver.)	0...2 (dep. on the range)	1128
FLo	low limit set point value guide controller	0... Fhi	1130
FHi	high limit set point value guide controller	Flo...400	1131
1..6nst	decimal point input 1..6	0...2 (dep. on the range)	0118..1d
1 Lo	low limit set point value	-999...bHi	112E
1 Hi	high limit set point value	blo...4000	112F
DT	allowed deviation actual val.(dt control)	0...400	1146
dSPL	lower display indication	0=OFF,1=SP,2=rSP,3=Y,4=°C, 5=°F,6=bar,7=%,8=Ist1,9=Ist2..	0140
DSP1..4	indication display line 1..4	0=OFF,1=1 SP,10/11=IST1/2	0164..67
EIN1..4	unit of measurement display line 1..4	3=m3_h, 4=C, 5=F, 6=%, 7=bar, 8=mbar, 9=mPas, 10=cSt,1=KGm3,12=mm	0168..6B
Pr-S	number of program steps	0...20	0149
SP.1 .. 20	1...20. program setpoint val., program 1*	Lo...Hi	4101..14
H' 1.. 20	1...20. holding time, program 1*	0...6000	3101..14

* (transmission only with deactivated program function)

Printout GSD-file:

```
; GSD file for types 9... - 99spd
; Date : 07.04.2009
; File  : KFM_00EB.GSD
-----------------------------------------------------------------
#Profibus_DP
GSD_Revision  = 1
Vendor_Name  = "KFM"
Model_Name   = "9...-99spd"
Revision     = "Rev. 1.05"
Ident_Number  = 0x00EB
Protocol_Ident  = 0      ; DP-Gerät
Station_Type   = 0       ; Slave
FMS_supp       = 0
Hardware_Release      = "HV V1.0"
Software_Release      = "SV V1.01"
9.6_supp       = 1
19.2_supp      = 1
45.45_supp     = 1
93.75_supp     = 1
187.5_supp     = 1
500_supp       = 1
1.5M_supp      = 1
3M_supp                = 1
6M_supp                = 1
12M_supp       = 1
MaxTsdr_9.6    = 60
MaxTsdr_19.2   = 60
MaxTsdr_45.45 = 60
MaxTsdr_93.75 = 60
MaxTsdr_187.5 = 60
MaxTsdr_500    = 100
MaxTsdr_1.5M  = 150
MaxTsdr_3M     = 250
MaxTsdr_6M     = 450
MaxTsdr_12M   = 800
Implementation = "SPC3"
Bitmap_Device = "KFM_9"
Redundancy     = 0
Repeater_Ctrl_Sig      = 2
; Slave-Specification:
Slave_Family   = 5       ; Controllers
24V_Pins       = 0
Freeze_Mode_supp      = 1
Sync_Mode_supp        = 1
Auto_Baud_supp        = 1
Set_Slave_Add_supp    = 0
Min_Slave_Intervall   = 0x0032
Modular_Station       = 1
Max_Module     = 0x01
Max_Input_Len = 128
Max_Output_Len        = 128
Max_Data_Len = 256
Max_Diag_Data_Len     = 64
```

Continued on page 8 !

Printout GSD-file (continued from page 7):

```
; Module-Definitions:
Module = "Format A: Fixpoint1" 0x10,0x50,0x20,0x60
EndModule
Module = "Format B: Floating point" 0x10,0xD1,0x20,0xE1
EndModule
Module = "Format C: 2 x Fixpoint1" 0x10,0x50,0x50,0x20,0x60,0x60
EndModule
Module = "Format D: 2 x Floating point" 0x10,0xD1,0xD1,0x20,0xE1,0xE1
EndModule
Module = "Format E: 3 x Fixpoint1" 0x10,0x50,0x50,0x50,0x20,0x60,0x60,0x60
EndModule
Module = "Format F: 3 x Floating point" 0x10,0xD1,0xD1,0xD1,0x20,0xE1,0xE1,0xE1
EndModule
Module = "Format G: 3/16 x Fixpoint1"
0x10,0x10,0x50,0x50,0x50,0x20,0x20,0x60,0x60,0x60,0x60,0x60,0x60,0x60,0x60,0x60,0x60,0x60,0x60,0x6
0,0x60,0x60,0x60
EndModule
Module = "Format H: 3/16 x Floating point"
0x10,0x10,0xD1,0xD1,0xD1,0x20,0x20,0xE1,0xE1,0xE1,0xE1,0xE1,0xE1,0xE1,0xE1,0xE1,0xE1,0xE1,0xE1
,0xE1,0xE1,0xE1,0xE1
EndModule
Module = "Format I: 4 x Fixpoint1" 0x10,0x50,0x50,0x50,0x50,0x20,0x60,0x60,0x60,0x60
EndModule
Module = "Format J: 4 x Floating point" 0x10,0xD1,0xD1,0xD1,0xD1,0x20,0xE1,0xE1,0xE1,0xE1
EndModule
Module = "Format K: 99spde12 Fixpoint1"
0x10,0x14,0x14,0x50,0x50,0x50,0x50,0x50,0x50,0x50,0x50,0x50,0x50,0x50,0x50,0x20,0x24,0x60,0x60,0x6
0,0x60,0x60,0x60,0x60,0x60,0x60,0x60,0x60,0x60
EndModule
Module = "Format L: 99spde12 Floatingp."
0x10,0x14,0x14,0xD1,0xD1,0xD1,0xD1,0xD1,0xD1,0xD1,0xD1,0xD1,0xD1,0xD1,0xD1,0x20,0x24,0xE1,0xE
1,0xE1,0xE1,0xE1,0xE1,0xE1,0xE1,0xE1,0xE1,0xE1,0xE1
EndModule
Module = "Format M: 99spde28 Fixpoint1"
0x10,0x14,0x14,0x50,0x50,0x50,0x50,0x50,0x50,0x50,0x50,0x50,0x50,0x50,0x50,0x50,0x50,0x50,0x50,0x5
0,0x50,0x50,0x50,0x50,0x50,0x50,0x50,0x50,0x50,0x50,0x50,0x20,0x24,0x60,0x60,0x60,0x60,0x60,0x60,0
x60,0x60,0x60,0x60,0x60,0x60,0x60,0x60,0x60,0x60,0x60,0x60,0x60,0x60,0x60,0x60,0x60,0x60,0x60,0x60
,0x60,0x60
EndModule
Module = "Format N: 99spde28 Floatingp."
0x10,0x14,0x14,0xD1,0xD1,0xD1,0xD1,0xD1,0xD1,0xD1,0xD1,0xD1,0xD1,0xD1,0xD1,0xD1,0xD1,0xD1,0x
D1,0xD1,0xD1,0xD1,0xD1,0xD1,0xD1,0xD1,0xD1,0xD1,0xD1,0xD1,0xD1,0xD1,0x20,0x24,0xE1,0xE1,0xE1,0xE1,
0xE1,0xE1,0xE1,0xE1,0xE1,0xE1,0xE1,0xE1,0xE1,0xE1,0xE1,0xE1,0xE1,0xE1,0xE1,0xE1,0xE1,0xE1,0xE
1,0xE1,0xE1,0xE1,0xE1,0xE1
EndModule
Module = "Format O: 99spde04 Fixpoint1"
0x10,0x14,0x14,0x50,0x50,0x50,0x50,0x20,0x24,0x60,0x60,0x60,0x60
EndModule
Module = "Format P: 99spde04 Floatingp."
0x10,0x14,0x14,0xD1,0xD1,0xD1,0xD1,0x20,0x24,0xE1,0xE1,0xE1,0xE1
EndModule
```