1 Terminals supply voltage
2 Coding switches address adjustment
3 Status-LED
4 RJ-45 connector KFM device
5 9-pole D-SUB plug Modbus- RTU
6 Configuration interface (service) for PC connection

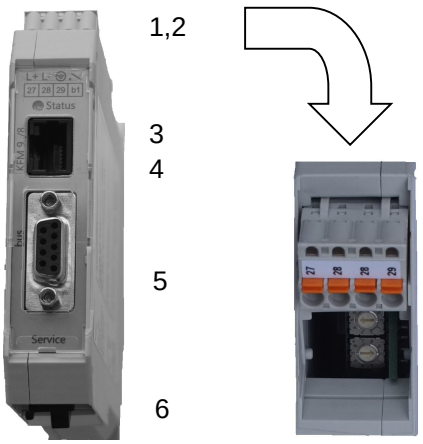


**Brief description:**
The connection of KFM devices to the MODBUS- RTU is realised by the external bus adapter 99sm.. which is configured to the requested transmission data e.g. actual value and setpoint. The MODBUS interface is able to replace separate wiring of external analogue (external setpoints, signal outputs) or digital signals (via binary inputs and status bits respectively via relay outputs and control bits).
The MODBUS interface is carried out as RS232-, RS485- or RS422- bus interface. The adapter has to be connected directly to the bus wiring using the 9-pole D-SUB plug.
Suitable resistors (e.g. in the connector plugs) must be present at the beginning and at the end of the bus line for communication via data bus. Shielded and twisted cables must be used. Lay the shield to ground potential. The communication between the adapter and the service interface of the KFM device takes place by a patch cable(1,5m), which is delivered with each adapter. For each segment 32 devices could be installed, with a repeater up to 99. The bus adapter provides the MODBUS-functions 01/05 (read single bit), 03 / 04 (read input register) and 16 (write multiple register). Analogue values are transmitted as 2 x 16 bit floating point numbers, binary values as 1 bit or 2 byte-word (16 bit, if necessary a multiple of it). The function of the adapter can be supervised by a fault bit. Additionally connection faults are recorded in the fault memory for diagnostic purposes.

**Types:**

| *fifth and sixth position* | | *seventh position* | |
|---|---|---|---|
| 99sm04. | Adapter for 4 MODBUS values, power supply 24V DC | 99sm..2 | for RS 232 interface |
| 99sm12. | Adapter for 12 MODBUS values, power supply 24V DC | 99sm..4 | for RS 485 interface |
| 99sm28. | Adapter for 28 MODBUS values, power supply 24V DC | 99sm..6 | for RS 422 interface |

*device variants (last number):*

| | |
|---|---|
| .0 | Functional module without power supply for connection to power supply modules |
| .0i | Functional module for connection to power supply of already existing KFM-assemblies |

*Power supply module:*

| | |
|---|---|
| 99e500 | Power supply module 100-250 V AC |

**Adjustments:**
The MODBUS adapter is delivered preadjusted. In case of changes, the preadjustments can easily be modificated by a configuration program in the WinPKS PC software via the service interface.

| | *designation* | *KFM parameter* | *MODBUS-register#* | *factory setting read / write* |
|---|---|---|---|---|
| Data word 1 | Control word 1 | 1004 | 10 (“Dec“) | write |
| Data word 2 | Bus setpoint 1 | 1060 | 20 (“Dec“) | write |
| Data word 3 | Actual value 1 | 1010 | 30 (“Dec“) | read |
| Data word 4 | Actual value 2* | 1011 | 40 (“Dec“) | read |

** = depending on type* *# =memory area in the modbus master*
*for further parameter codes according to* protocol *KFM 2.0 refer to manual 99sm.*

| | | |
|---|---|---|
| Bus monitor | Monitor check time (0..100 sec), period within which a bus request shall take place, otherwise LED signals a failure. *Hint: Bus monitor is deactivated by setting 0* | 5 |
| Delay time | Delay time (0..250ms) for a modbus-adapter reply | 0 |
| Baudrate | Modbus baudrate (9600/19200/38400) | 9600 |
| Parity, Stopbits | Modbus parity (None/Even/Odd), number of stopbits (1, 2) | none, 2 stop |
| Bus address | 0..99, **Coding switch**, available after removing the covering | 5 |

*Hint: In case of multiple bus participants different addresses are to be adjusted !*

## Commissioning:

Set the desired modbus-address by use of the coding switch. Connect Modbus with 9-pole D-SUB connector and patch wire (1,5m) with service interface of the KFM device.
*Use of the supply voltage on the Modbus interface only for terminating resistors.*

The LED on the front signalises the operating status:

| | |
|---|---|
| yellow permanent: | Normal operation |
| yellow flashing: | Communication error between KFM device and MODBUS adapter<br>Hint: all transmitted values of the respective device are set to “0“,<br>bit 8 of the respective status byte (communication error) ist set to “0“.<br>The respective fault memory will be increased by 1. |
| red flashing: | Communication error MODBUS, MODBUS not active,<br>the respective fault memory will be increased by 1. |
| red yellow flashing: | Communication error MODBUS and KFM device,<br>each fault memory will be increased by 1. |

## Installation dimensions:

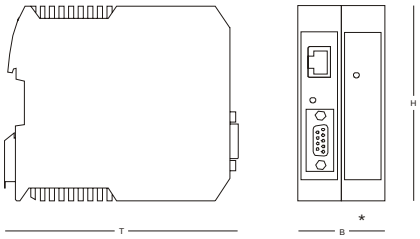


H= 99mm, * Version without or with power supply module: B = 22,5mm or 45mm, T = 116mm

## Technical data:

Housing: for fastening to 35mm mounting rail
Installation orientation: optional
Type of protection: IP20 according to EN 60529
Perm. ambient temperature: 0..60°C
Nominal temperature: 20°C
Power supply: 24V DC, about 100 mA

## Technical data:

| | | | |
|---|---|---|---|
| Modbus-interface: | RS232 | RS485 | RS422 |
| Connection (serial): | asynch.,2-wire (+GND) | asynchronous, 2-wire | asynchronous, 4-wire |
| Cable lenght | 15m | 1000m | 1000m |
| Max. number of devices: | 1 | 31 | 31 |

## Connection diagram:

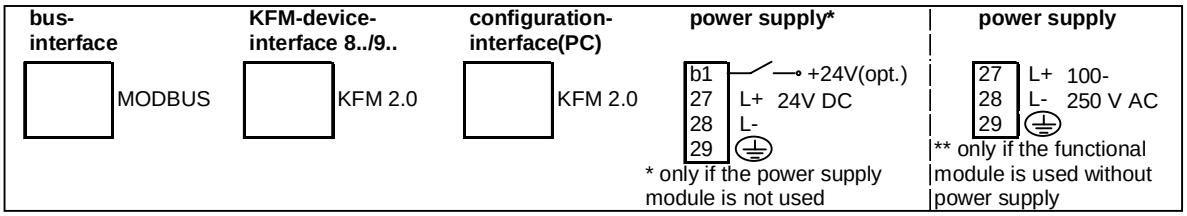


## Wiring example:

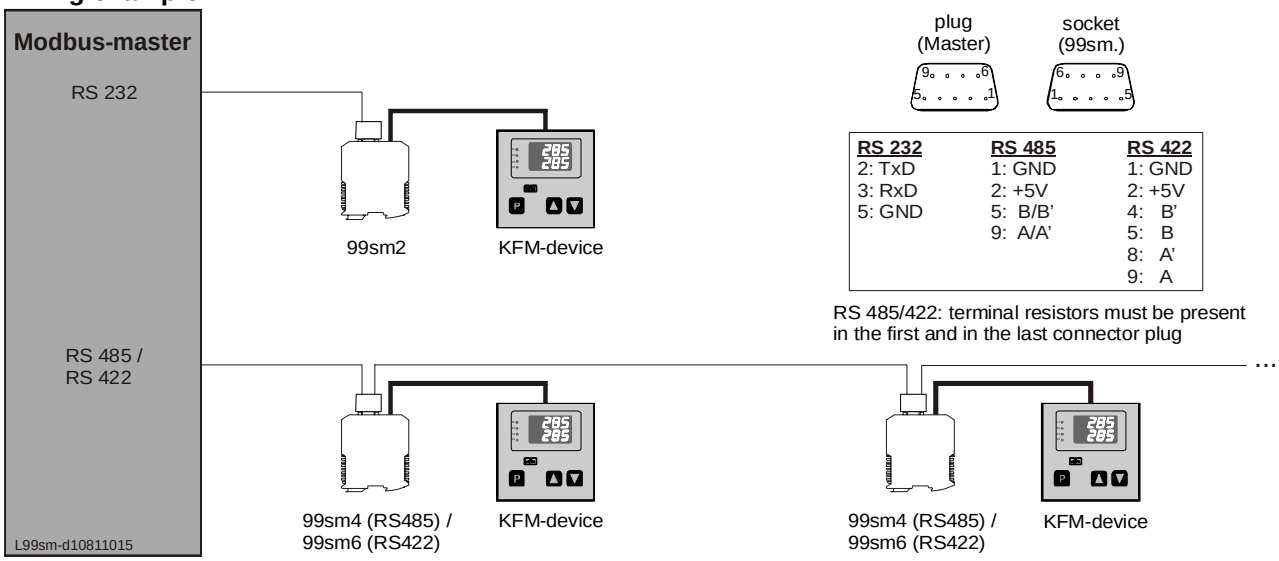

**Data transmission:**

The preadjusted transmission data are cyclically updated between the bus adapter and the connected KFM-device. By using the functions "read register" (function-code 0x03 and 0x04) as well as "write register" (function-code 0x10) the data can be accessed via modbus. For this purpose, the write- or read commands must contain the modbus- adapter address and the function-code in addition to the modbus-register wich is adjusted at the adapter, the number of data words (16 bit) to be transferred and the checksum (CRC). The data to be transferred depends on the type and uses 1 (status- and control word 1), 2 (analogue values or parameters) or 3 data words (status- and control words 2 and 3).

*Hint: A freely adjustable memory area ("modbus- register") which is accessible via modbus, must be allocated in the adapter for each desired parameter code (see chapter parameter).*

**Structure of the supported modbus functions:**

*Modbus requests data (read, 0x03 / 0x04)*

| | | | | | | | |
|---|---|---|---|---|---|---|---|
| modbus adapter-adress | function-code | modbus-register | modbus-register | number of data words | number of data words | CRC | CRC |

*KFM-modbus adapter responds*

| | | | | | | | | | | |
|---|---|---|---|---|---|---|---|---|---|---|
| modbus adapter-adress | function-code | number of bytes | value data w.1 hi-byte | value data w.1 lo-byte | value data w.2 hi-byte | value data w.2 lo-byte | value data w.3 hi-byte | value data w.3 lo-byte | CRC | CRC |

*Modbus transmits data (write, 0x10)*

| | | | | | | | | | | | | |
|---|---|---|---|---|---|---|---|---|---|---|---|---|
| modbus adapter-adress | function-code | modbus-register | modbus-register | number of data words | number of data words | number of bytes | value data w.1 hi-byte | value data w.1 lo-byte | value data w.2 hi-byte | .. | CRC | CRC |

*KFM-modbus adapter responds*

| | | | | | | | |
|---|---|---|---|---|---|---|---|
| modbus adapter-adress | function-code | para-meter code | para-meter code | number of data words | number of data words | CRC | CRC |

**Examples:**

*Modbus requests modbus register 30 actual value 1 (code 1010 *) from modbus adapter with adress 5*

| | | | | | | | |
|---|---|---|---|---|---|---|---|
| 05 | 04 | 00 | 1E | 00 | 02 | 75 | 4A |

*Modbus adapter with adress 5 responds with value 100*

| | | | | | | | | |
|---|---|---|---|---|---|---|---|---|
| 05 | 04 | 04 | 00 | 00 | 42 | C8 | 8F | 72 |

*Modbus transmits modbus Register 20 setpoint 1 (code 1060 *) value 100 to the modbus adapter with adress 5*

| | | | | | | | | | | | | |
|---|---|---|---|---|---|---|---|---|---|---|---|---|
| 05 | 10 | 00 | 14 | 00 | 02 | 04 | 00 | 00 | 42 | C8 | 17 | F9 |

*Modbus adapter with adress 5 responds*

| | | | | | | | | |
|---|---|---|---|---|---|---|---|---|
| 05 | 10 | 11 | 00 | 00 | 02 | 04 | .. | .. |

* see assignment table on page 1

**Structure of the analog transmit values (2 data words)**

Analogue data or parameters are transmitted in MODBUS-float-format (2 x 16 bit data words). The order of the individual bytes is switched compared to the single-float-format according to standard IEEE754. Depending on the master system used, this must be checked and adjusted if needed.

*MODBUS-float-format*

| | | | |
|---|---|---|---|
| MMMMMMMM | MMMMMMMM | SEEEEEEE | EMMMMMMM |

*Single-float-format (32bit) according to standard IEEE 754*

| | | | |
|---|---|---|---|
| SEEEEEEE | EMMMMMMM | MMMMMMMM | MMMMMMMM |

S = sign (1 bit); E = exponent (complement to base 2); M = normalized mantissa (23 bit)

**Structure of status- and control words**

**read:** (from KFM device)

*status word 1 (1 data word, generally existent)*

| | | | | | | | |
|---|---|---|---|---|---|---|---|
| bit 15 | bit 14 | .. | .. | .. | .. | bit 2 | bit 1 |

bit 1..7: status measuring input 1 .. 7
0 = error-free measurement; 1 = fault at the resp. input
bit 8: status KFM-device-interface, 1 = normal operation, 0 = conn. error

*status word 2 (3 data words, only existing if code 1002 is configured)*

| | | | | | | | |
|---|---|---|---|---|---|---|---|
| bit 48 | bit 47 | .. | .. | .. | .. | bit 2 | bit 1 |

Bit 1..40: status binary input 1 .. 40
0 = binary input deactivated; 1 = binary input activated

*status word 3 (3 data words, only existing if code 1005 is configured)*

| | | | | | | | |
|---|---|---|---|---|---|---|---|
| bit 48 | bit 47 | .. | .. | .. | .. | bit 2 | bit 1 |

Bit 1..40: status relays 1..40
0 = contact deactivated; 1 = contact activated

**write:** (to KFM device)

*control word 1 (1 data word, generally existent)*

| | | | | | | | |
|---|---|---|---|---|---|---|---|
| bit 15 | bit 14 | .. | .. | .. | .. | bit 2 | bit 1 |

bit 1 .. 4: : control bus-setpoint 1 .. 4
0 = bus-setpoint deactivated, internal sepoint (SP) active
1 = bus-setpoint active (SPB)

*control word 2 (3 data words, only existing if code 1005 is configured)*

| | | | | | | | |
|---|---|---|---|---|---|---|---|
| bit 48 | bit 47 | .. | .. | .. | .. | bit 2 | bit 1 |

bit 1 .. 40: control additional contact 1 .. 40, if the contact is configured to “BUS“
0 = deactivate contact
1 = activate contact

**Diagnostics:**

Two resettable internal fault memorys are available for communication error analysis on the modbus- and KFM-service-interface. The number of communication faults is recorded by code 5281(communication fault to the modbus) and 5282 (communication fault to the KFM-device). Both counter values are reset to zero by setting code 5280 (reset) to 1. Reading of the fault memorys and the reset function can only be achieved by the configuration-interface.

| display | purpose | value range | CODE (HEX) |
|---|---|---|---|
| *Operating indication:* | | | |
| **-** | status- / control words 1..5 | | 1001..05 |
| **-** | status word type 821H75s. | | 100F |
| **IST1** | actual value 1..6 | | 1010..15 |
| **Y(1)..5** | controller output channel 1..5 | -100...100 | 1020..24 |
| **Y** | active controller output (e.g. 99g8.) | -100...100 | 102A |
| **D.W.** | difference actual value 1 – actual value 2 | | 1052 |
| **M.W.** | average actual value 1 / 2 | | 1051 |
| *Setpoint level:* | | | |
| **(1)SP** | (internal) set point value channel 1 | Lo...Hi *(see level 2)* | 1(1)00 |
| **(1)SP2** | second set point value channel 1 | Lo...Hi *(see level 2)* | 1(1)01 |
| **(1..5SP)** **(rSP)** | active set point value channel 1..5, also active ramp- / program set point value | | 1030..34 |
| **SP..** | actual program step set point | | 3002 |
| **SPB** | bus setpoint | Lo...Hi *(see level 2)* | 1060..64 |
| **SP-F** | switch over SP/SPE | 0 = SP, 1 = SPE | 111C |
| **2SP** | current sequential controller set point value | | 103F |
| **P-CY** | number of program cycles* | 0...20 | 0148 |
| **Pro** | actual program status | 0=off,1=on,2=stop | 3001 |
| **d15** | density | 500...1500 | 0152 |
| *Parameter level 1:* | | | |
| **FUE** | guide controller on/off | 0=off,1=on | 014D |
| **(1)P(1)..4** | proportional band XP1..4 channel 1 | 0.0...999.9 | 1(1)03..06 |
| **(1)I(1)..4** | integral action time Tn1..4 channel 1 | 0.0...999.9 | 1(1)07..0A |
| **(1)d(1)..4** | derivative time Tv1..4 channel 1 | 0.0..99.9/0.00..99.99 | 1(1)0B..0E |
| **(1)Sh** | neutral zone Xsh channel 1 | 0.05...1,0 | 1(1)0F |
| **(1)SA1..2** | switching interval 1..2 channel 1 | 0...range(bLo/Hi) *(see* | 1(1)13..14 |
| **(1)Sd1..2** | switching difference 1..2 channel 1 | 0...range(bLo/Hi) *level 2)* | 1(1)15..16 |
| **SA1..8** | switching interval addit.contact 1..8 | 0.0...range | 2000..07 |
| **Sd1..8** | switching diff. addit.contact 1..8 | 0.1...range | 2008..0F |
| *Parameter level 2(Usable parameters depending on the type, consider potential mutual interference !)* | | | |
| **Unit** | display unit °C / °F | 0=°C, 1=°F | 013F |
| **0bLo** | min. val. range of actual val. 0 (diff/ aver.) | -999...bHi | 1129 |
| **UNIT** | viscosity | 0=cst, 1=cP | 0151 |
| **0bHi** | max. val. range of actual val. 0 (diff/ aver.) | blo...4000 | 112A |
| **1..6bLo** | min. value range input 1..6 | -999...bHi | 010C..11 |
| **1..6bHi** | max. value range input 1..6 | blo...4000 | 0112..17 |
| **(1..3)SLo** | min. value range signal output | -999...Shi | 012A..2C |
| **(1..3)SHi** | max. value range signal output | SLo...4000 | 0130..32 |
| **0nst** | decimal point actual value 0 (diff/ aver.) | 0...2 (dep. on the range) | 1128 |
| **FLo** | low limit set point value guide controller | 0... Fhi | 1130 |
| **FHi** | high limit set point value guide controller | Flo...400 | 1131 |
| **1..6nst** | decimal point input 1..6 | 0...2 (dep. on the range) | 0118..1d |
| **1 Lo** | low limit set point value | -999...bHi | 112E |
| **1 Hi** | high limit set point value | blo...4000 | 112F |
| **DT** | allowed deviation actual val.(dt control) | 0...400 | 1146 |
| **dSPL** | lower display indication | 0=OFF,1=SP,2=rSP,3=Y,4=°C, 5=°F,6=bar,7=%,8=Ist1,9=Ist2.. | 0140 |
| **DSP1..4** | indication display line 1..4 | 0=OFF,1=1 SP,10/11=IST1/2 | 0164..67 |
| **EIN1..4** | unit of measurement display line 1..4 | 3=m3_h, 4=C, 5=F, 6=%, 7=bar, 8=mbar, 9=mPas, 10=cSt,1=KGm3,12=mm | 0168..6B |
| **Pr-S** | number of program steps | 0...20 | 0149 |
| **SP.1 .. 20** | 1...20. program setpoint val., program 1* | Lo...Hi | 4101..14 |
| **H' 1.. 20** | 1...20. holding time, program 1* | 0...6000 | 3101..14 |

* (transmission only with deactivated program function)

| display | purpose | value range | CODE (HEX) |
|---|---|---|---|
| *Configuration level: (Usable parameter depending on the type, consider potential mutual interference !)* | | | |
| **ConF** | type of controller | | 013C |
| **Cod1** | code number | 0...9999 | 0142 |
| **Cod2** | code 2..4 | 0...9999 | 0161..63 |
| **LNG** | language selection | 0=DEUTSCH, 1=ENGLISH, 2=USER DEF, 3=OFF | 8800 |
| **Ist1..6** | correction actual value 1..6 | blo...bHi (+/-) | 0124..29 |
| **Ain1..6** | type of measuring input 1..6 | 0=4-20, 1=2-10, 2=0-20, 3=0-10, 5=rtd, 20=n100 | 011E..23 |
| **SP-F** | switch-over of the ext. setpoint via menu / bin. input (SP/SPE) | -2=AUS, -1=SPEB(bin.), 0=SPEM(menu), 1=SP2 | 014F |
| **YE** | switch-over SPE / YE | 0=SPE,1=YE | 114E |
| **SPE** | function of the ext. setpoint | 2=AbS,3=Add,4=Sub | 112D |
| **REL_** | switch.behaviour of the first step,step contr. | 0=stat, 1=rel | 1144 |
| **(1) Y"** | travel time of actuator channel 1 | 6...600 | 1(1)3A |
| **(1) TE** | switch-on delay per step, step controller | 0...600 | 1(1)43 |
| **Cy"** | cycle time | 2...120 | 013D |
| **(1) TP** | pause time step controller | 0...60 | 1(1)45 |
| **(1)out** | type of output signal 0 / 4...20mA | 0=0-20,1=4-20 | 1(1)3B |
| **(1)out** | output direction di / in | 0=in(in),1=(in)di,2=diin,3=didi | 1(1)3C |
| **dSLo** | valve drop. minimum | 0...50 | 1122 |
| **out** | limitation selection (min / max) | 0=Lo, 1=Hi | 1127 |
| **dSHi** | valve drop. maximum | 50...100 | 1123 |
| **(1) ib** | integration range limit channel 1 | 0...100 | 1(1)40 |
| **(1)YLo** | low limit control output | 0...Yhi | 1(1)38 |
| **(1)YHl** | limitation control output | -100...100 | 1(1)41 |
| **(1)YHi** | high limit control output | YLo...100 | 1(1)39 |
| **(1) TY** | control output slope | 0...100 | 1(1)42 |
| **(1) DB** | damping range | 0...100 | 1(1)25 |
| **(1) D"** | damping value | 0...100 | 1(1)26 |
| **Gr1..2** | gradient 1..2 | 0...100 | 1132..33 |
| **rF1..2** | waiting window value 1..2 | 0.1...999.9 | 1134..35 |
| **td** | dead range | 0.0...10.0 | 113D |
| **Sout(1..3)** | signal output 0/4...20mA | 0=0-20,1=4-20 | 0136..38 |
| **Sou1..5** | assignment signal output | 11=Ist1, 12=Ist2, 21=SP | 0155..5A |
| **(1)Y_S** | output reaction at meas.fault (relais) | 0=off,1=K1,2=K2 | 1(1)3E |
| **(1)Y_S** | output reaction at meas.fault (Y) | YLo...YHi (continuous) | 1(1)3F |
| **(1)YAP** | operating point | YLO...Yhi | 1(1)37 |
| **YH** | switch over control val. on / off | 0=off,1=on | 1148 |
| **YH** | external control value | 0...100 | 1149 |
| **d.SP** | max. deviation actual value | 0.1...200.0 | 0147 |
| **t"** | tolerance period act.value (ser. interface) | 1...100 | 014E |
| **rEL1..8** | function selection additional contact 1..8 | 0=LCA, 1=LCE, 2=SuA, 3=SuE, 4=SoA, 5=SoE, 6=StA, 7=USA, 8=USE, 11=OFF, 12=ON | 2010..17 |
| **rEL1..8** | input selection additional contact 1..8 | 1...6=Ist1...6, 11=1Y... | 2018..1F |
| **rEL1..8** | channel / setpoint selection additional contact 1..8 | 1...4=1..4SP, 11=rSP... | 2020..27 |
| **rEL1..8** | condition relay 1...8 for measuring line fault | 0=SiA,1=SiE | 2028..2F |
| **Adr** | controller address | 1...255 | 0141 |
| **BAUD** | baud rate | 0=9600, 1=19200, 2=38400 | 2629 |
| **anSERin** | analog input value (via interface) | -10000..10000 | 6200..09 |
| **digSERin** | 8-bit digital input value (via interface) | 00 .. FF hex e.g. 0..255 | 6210..19 |
| **anSERout** | analog output value (via interface) | -10000..10000 | 6220..29 |
| **digSERout** | 8-bit digital output value (via interface) | 00 .. FF hex e.g. 0..255 | 6230..39 |